DWG NO.	REV
2134	

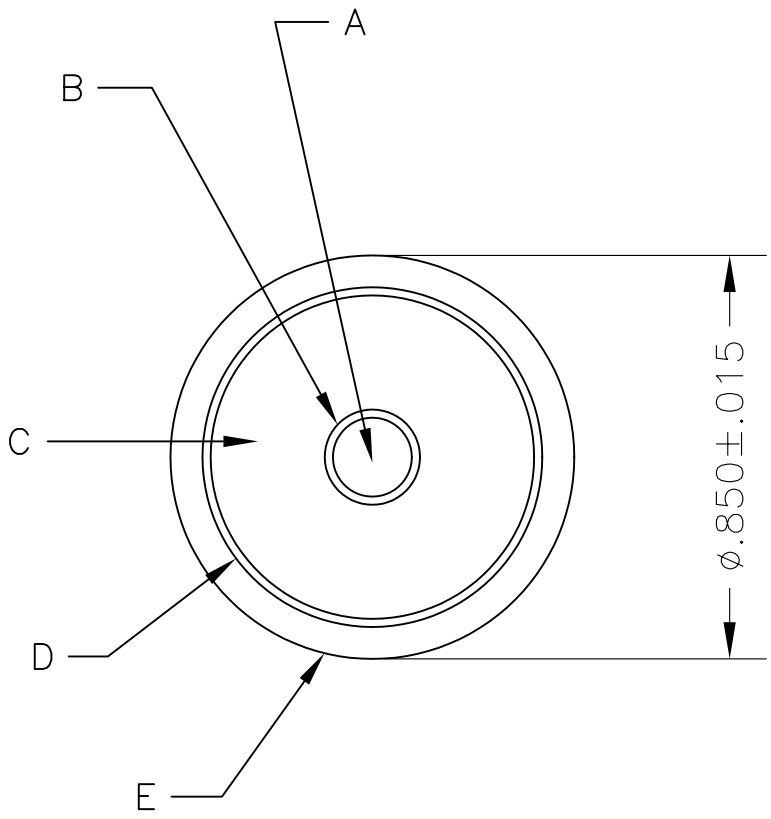

LEGEND

A. #12 AWG (19/25) T.C.

B. SEMICON POLYETHYLENE TO ø.220

C. INSULATING POLYETHYLENE TO ø.760±.015

D. BRAIDED SHIELD, #34 AWG T.C. , 90% COV
10ENDS, 24 CARRIER

E. JACKET: PVC: BLACK

NOTES:
1. TEST VOLTAGE: 220KVDC– 10 MINUTES
2. JACKET SPARK TEST: 5KV

REVISIONS

REV	ECO NUMBER	APPD	DATE
–	RELEASE DRAWING		

THIS DOCUMENT AND THE INFORMATION CONTAINED IN IT ARE THE PROPERTY OF DIELECTRIC SCIENCES, INC AND SHALL NOT BE REPRODUCED OR COPIED OR USED AS THE BASIS FOR THE MANUFACTURE OF APPARATUS WITHOUT PERMISSION.

UNLESS OTHERWISE SPECIFIED

DIMENSIONS ARE IN INCHES
TOLERANCE ON

DECIMALS	ANGLES
.XX ±.01	±
.XXX ±.005	

CONCENTRICITY .005 TIR
REMOVE BURRS & SHARP EDGES
ALL MACHINE SURFACES 125√

DO NOT SCALE THIS DRAWING

DRAWN	GPLAMBERT	DATE 15NOV00
CHECKED	DJ LEARY	DATE 15NOV00
APPROVED	DJ LEARY	DATE 15NOV00
MATERIAL		
FINISH		

DIELECTRIC SCIENCES,INC
CHELMSFORD, MASSACHUSETTS 01824

CABLE: HV; 200KVDC, 12AWG

SIZE	FSCM NO.	DWG NO.	REV
A	50509	2134	

SCALE | SHEET 1 OF 1